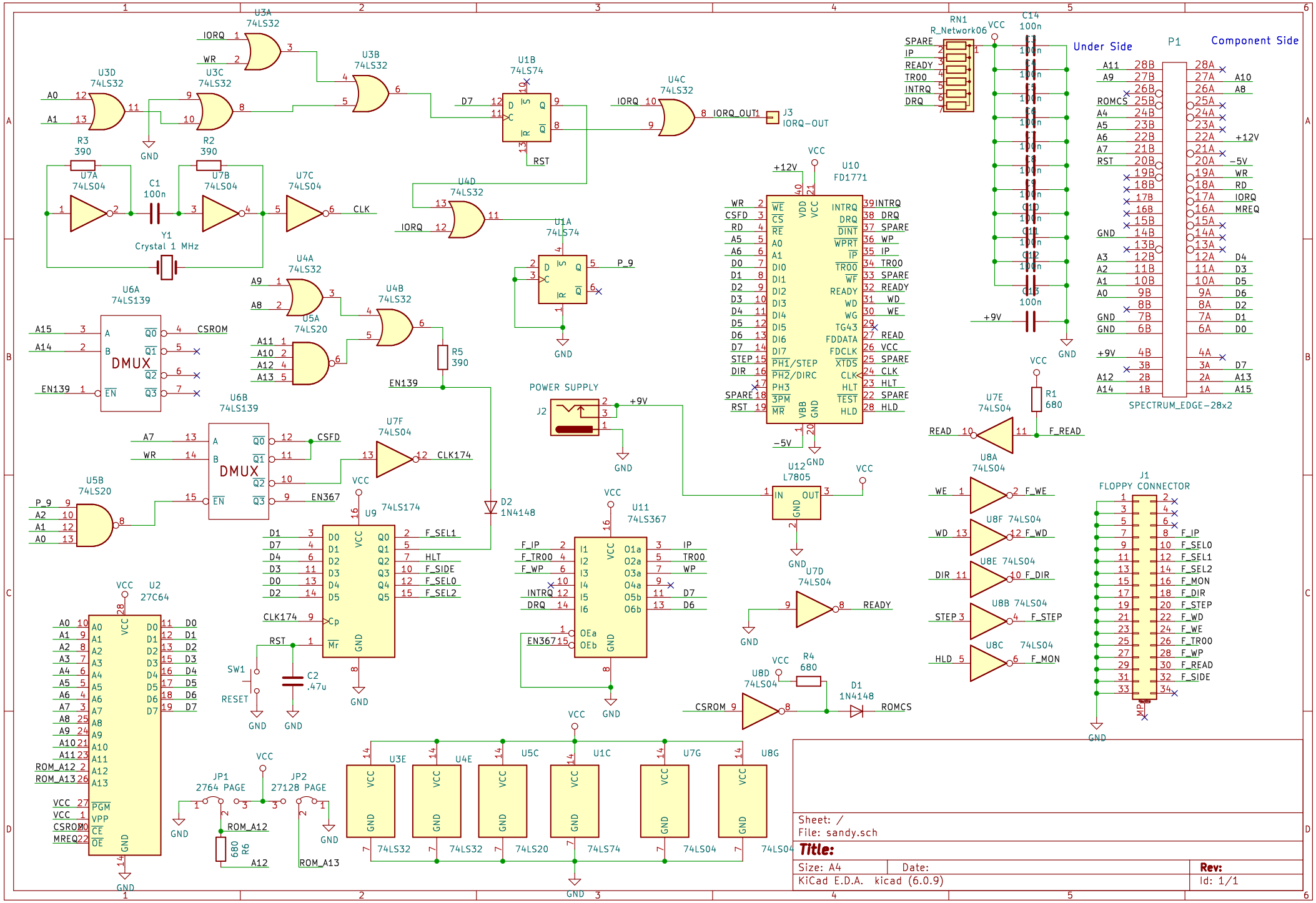

U3A 74LS32
U3B 74LS32
U3C 74LS32
U3D 74LS32
U1B 74LS74
U4C 74LS32
U4D 74LS32
U1A 74LS74
U7A 74LS04
U7B 74LS04
U7C 74LS04
U4A 74LS32
U4B 74LS32
U5A 74LS20
U6A 74LS139
U6B 74LS139
U5B 74LS20
U7F 74LS04
U9 74LS174
U2 27C64
U10 FD1771
U11 74LS367
U12 L7805
U7D 74LS04
U8D 74LS04
U7E 74LS04
U8A 74LS04
U8F 74LS04
U8E 74LS04
U8B 74LS04
U8C 74LS04
RN1 R_Network06
C14 100n
C13 100n
Under Side
Component Side
P1
SPECTRUM_EDGE-28x2
J3 IORQ-OUT
POWER SUPPLY
J2
J1 FLOPPY CONNECTOR
SW1 RESET
C2 .47u
D2 1N4148
D1 1N4148
R1 680
R4 680
R5 390
R6 680
R3 390
R2 390
C1 100n
Y1 Crystal 1 MHz
JP1 2764 PAGE
JP2 27128 PAGE
U3E 74LS32
U4E 74LS32
U5C 74LS20
U1C 74LS74
U7G 74LS04
U8G 74LS04
Sheet: /
File: sandy.sch
Title:
Size: A4
Date:
Rev:
KiCad E.D.A. kicad (6.0.9)
Id: 1/1