PP Floppy interface for ZX Spectrum

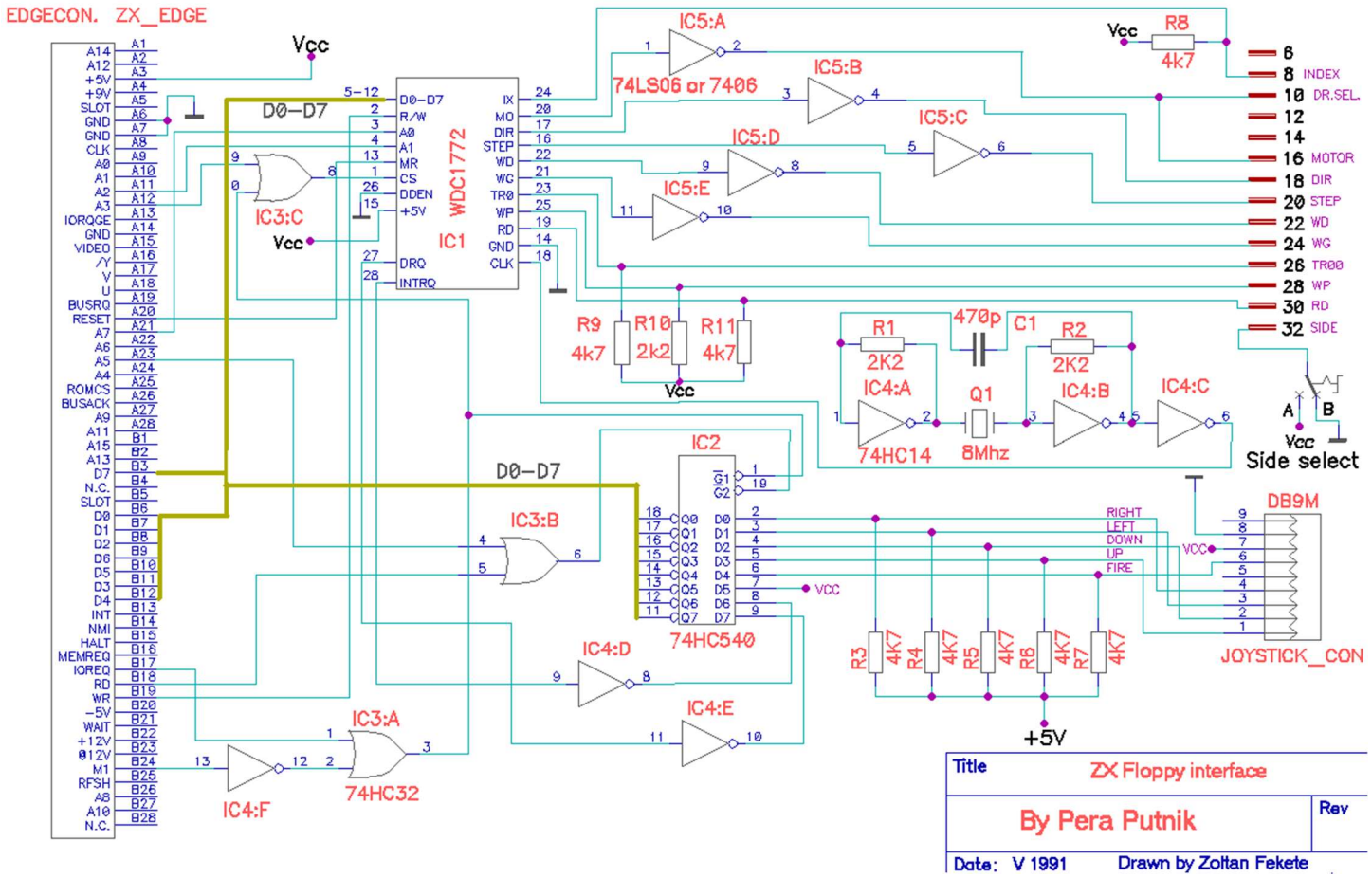

On 26. May 1998 schematic is slightly modified, and now it works fine with Spectrum 128K. Instead of connecting Spectrum's (Z80) address line A1 to FDC's pin 3 (A0) I connected Spectrum's line A7.
It was necessary, because 128K models uses condition that A1 and A15 are low by IN/OUT for accessing memory bank control logic in ULA chip. Actually only conditions are: A1=0 and IORQ line of Z80 is active (low). Both IN and OUT instructions activates memory bank control port. A15 could not be controlled in most cases - by INI and OUTI it takes value from B register, which is used as loop counter.
I purchased Spectrum 128K before about 2 months, and this is first 128K model what I seen from close...

Port addresses are now:
Command/status register: #73
Track register: #F3
Sector register: #77
Data register: #F7

Joystick interface is **Kempston** compatible.
Port address is: #DF , you may use also more common address #1F.
Bits 6-7 of this port are used for read signals INTRQ and DRQ of FDC chip.

Instructions for PP Spectrum Floppy ROM

This ROM contains simple floppy disk operating system, which main purpose is simple storage and usage of files, mostly playing games. Therefore no complicated file operations etc., only save and load complete files.

There is also snapshot function, more details later.

Keyboard input is changed and all commands & functions must be entered letter by letter, unlike by original Spectrum 48K. This is good because people need much time to adapt for Speccy's input system, and I think that noone use regularly and exclusively only Spectrum today. Most of commands can be shorted by typing only first 2 letters - try it, and you will see...

SAVE & LOAD

Usage of this commands is almost same as by original tape commands.
So SAVE goes: SAVE "name" [CODE] [start, length] .
Max len of filename is 15 char (instead 10 original).
LOAD has same syntax as by tape. But you can't use LOAD "" - this is not possible by disks.
There is also no support for arrays. If you want save arrays, save it like BASIC program (SAVE "name").
It's rare used, and needs lot of ROM space, so I dropped it out.

ERASE

Deleting of files : ERASE "name" - no need to type CODE for block. Only last file on floppy side may be erased.

CAT

CAT command will print on screen files on floppy side with main parameters and remaining free space.

SNAPSHOT

Purpose is to save complete machine state to file, and making possible to load it, and continue play (work ?) at same

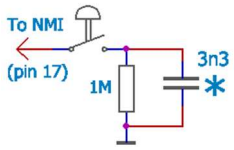

point. You need NMI button for this to work.
When pressing NMI button, lines in Border appear. Then you have 3 choices:
Pressing C continues
Pressing B jumps into Basic - this is not always possible (some games destroy complete system (variables))
Pressing M is for snapshot store - it resets Speccy, and then user must type MOVE "name" where name is desired filename. Block of 48 KB will be saved on floppy.
Later you can load it with : LOAD "name" CODE.

Note: you must have at least 58KB free space on floppy to this to work correct (this is because snapshot uses end of floppy as temporary store place). Floppy must be inserted before pressing M.
Also floppy must bee error-free (no bad sectors) and no write-protect of course.

OTHER

There is also couple small improvement in ROM, like hex-input, conversion etc.
You can enter numbers in hex form by adding prefix &. So : PRINT &ff (or &FF) will display 255. Max value is &FFFF.
For hex outprint you need prefix % by print: PRINT %100 will display &64 .

Of course I have simple program for format floppies.

Pera Putnik surface@ptt.yu http://8bitchip.info/zx48/zx.htm

File format structure - Pera Putnik (PP) format

Used floppies are standard 3.5 inch double density (720K) diskettes. Sides are threaten separated, because of mechanical switch. 10 sector/track is used, so total capacity per side is 400 KB.

It is divided as follows (by sectors):

0	Pointer to first free sector. Contains only 2 bytes - initially it is 10
1-9	Catalog of files on side. Each file record contains 32 bytes, so there is place for 9x16=144 files per disk side
10-799	Data area. Here are placed files in order as they been recorded

Minimum used length is 1 sector - 512 bytes. File from 7 bytes uses 1 sector, from 513 bytes 2 sectors etc. No fragmentation... But only last file can be deleted.

File record structure (by byte):

0	Type. 0=Basic, 3=Code . Arrays are not supported
1-15	Name. Max length is 15 char. Lower case not equ. to capital (like in Unix)
16-17	Lenght of file in bytes
18-19	Begin address for code, Autostart line for Basic
20-21	Lenght of Basic program without variables
22-23	Start sector on disk side (logical)
24	Lenght in sectors (or used sectors count) for file - byte (Max len 96 sect=48KB)
25-26	Stack pointer - for snapshot
27-31	Not used, should be zero

As you may see, first 22 byte is similar to standard Spectrum tape header, except that name lenght is enlarged to 15 chars. Additional entries are for file position on disk & snapshot.